Heavy Duty Planetary
HD-*P* 40,000 / 50,000

- Rated Line pull 40,000 lbs and 50,000 lbs
- Meets SAE J706
- Made in the USA

HD-*P* 40,000 / 50,000 lbs Features

- Less weight - only 742 lbs. (200 lbs. lighter)
- 15% faster line speed than competition
- Compact design - 38” long
- Internal air-shift free spool
- Low temperature shifting -54˚F
- Positive locking clutch
- High efficiency gear set
- Pneumatic variable pressure tensioner
- Two speed motor, standard

Specifications

Rated Line Pull	40,000 lbs.....(18,100 kgs) 50,000 lbs.....(22,670 kgs)
Gear Reduction	.....51.35:1
Weight (without cable)	HD-*P* 40,000.....740 lbs. (336.36 kgs) HD-*P* 50,000.....742 lbs. (337.27 kgs)

LAYER OF CABLE		1	2	3	4	5	6
*RATED LINE PULL PER LAYER (HD-*P* 40,000)	Lbs. Kgs.	40,000 18,100	33,500 15,100	28,800 13,000	25,300 11,400	22,500 10,200	22,300 9,200
*RATED LINE PULL PER LAYER (HD-*P* 50,000)	Lbs. Kgs.	50,000 22,680	41,800 18,960	36,600 16,320	31,600 14,330	28,100 12,740	25,400 11,520
CABLE CAPACITY	Ft. M.	25 7	55 16	95 28	135 41	185 56	235 71
LINE SPEED (at 17 GPM) (HD-*P* 40,000)	FPM (MPM)	16 (4.8)	18.7 (5.6)	21 (6.3)	24 (7.2)	27 (8.2)	29 (8.8)
LINE SPEED (at 17 GPM) (HD-*P* 50,000)	FPM (MPM)	20 (5.6)	22 (6.6)	25 (7.6)	28 (8.6)	31 (9.5)	35 (10.5)

* These specifications are based on recommended wire rope of 3/4” diameter EIPS cable and a 9.6 cu.in. /Rev. motor (HD-*P* 40,000) or a 11.9 cu.in. /Rev. motor (HD-*P* 50,000).

Winch Dimensions

WINCH MODEL	A INCHES MM	B INCHES MM	C INCHES MM	D INCHES MM	E INCHES MM
HD-*P* 40,000	38.46 976,88	18.28 464,31	16.04 407,42	22.43 569,47	17.56 446,02
HD-*P* 50,000	38.71 980,69	20.59 522,99	16.02 406,91	22.69 576,33	17.56 446,0

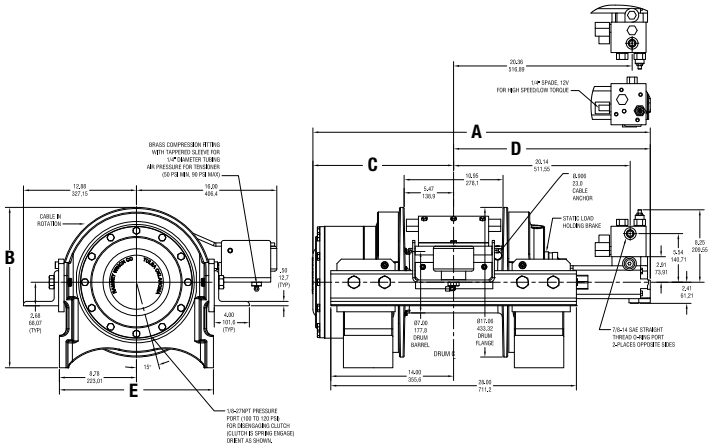

Winch Model HD-P 40,000

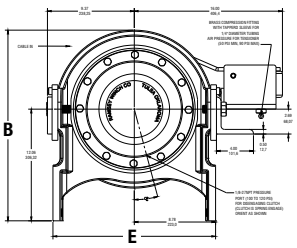
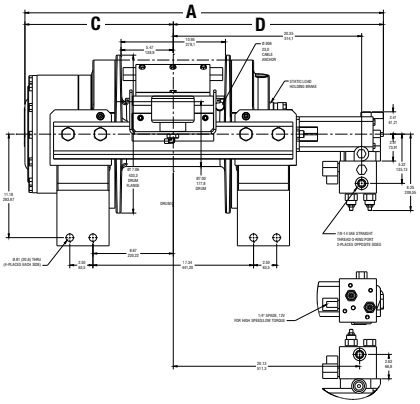
Winch Model HD-P 50,000